ST800 TRANSMITTER
OPERATING INSTRUCTIONS
1892 1227

These operating instructions are intended to provide the user with sufficient information to install and operate the unit correctly.

The Wood and Douglas ST800 UHF transmitter is intended to fulfil numerous OEM applications by virtue of its highly flexible synthesized design approach, miniature size and cost-effective performance. The transmitter can accept analogue and digital data input and provides an RF output power of 25mW, adjustable down to 5mW.

The use of this module must be carefully controlled as the sub-bands within the 868 - 870MHz band have differing requirements for maximum transmitted power, duty cycle and labelling.

These restrictions of use are detailed in the Radiocommunications Authority Document RA114 and CEPT/ERC Recommendation 70-03. This information is also shown in the Table under the “Sub-Band Information” section of this document.

The ST800 is approved to EN 300 220 for use in the UK and throughout Europe.

Failure to follow the guidelines detailed in this document will invalidate the type approval of the module.

RESTRICTIONS OF USE

The ST800 is approved with the following restrictions of use:

Power Supply	6 - 15VDC Note: not approved for vehicular supply
Mode of operation	Portable and Mobile
Maximum transmitted power	refer to “Sub-Band Information” section
Channel spacing	25kHz

INSTALLATION

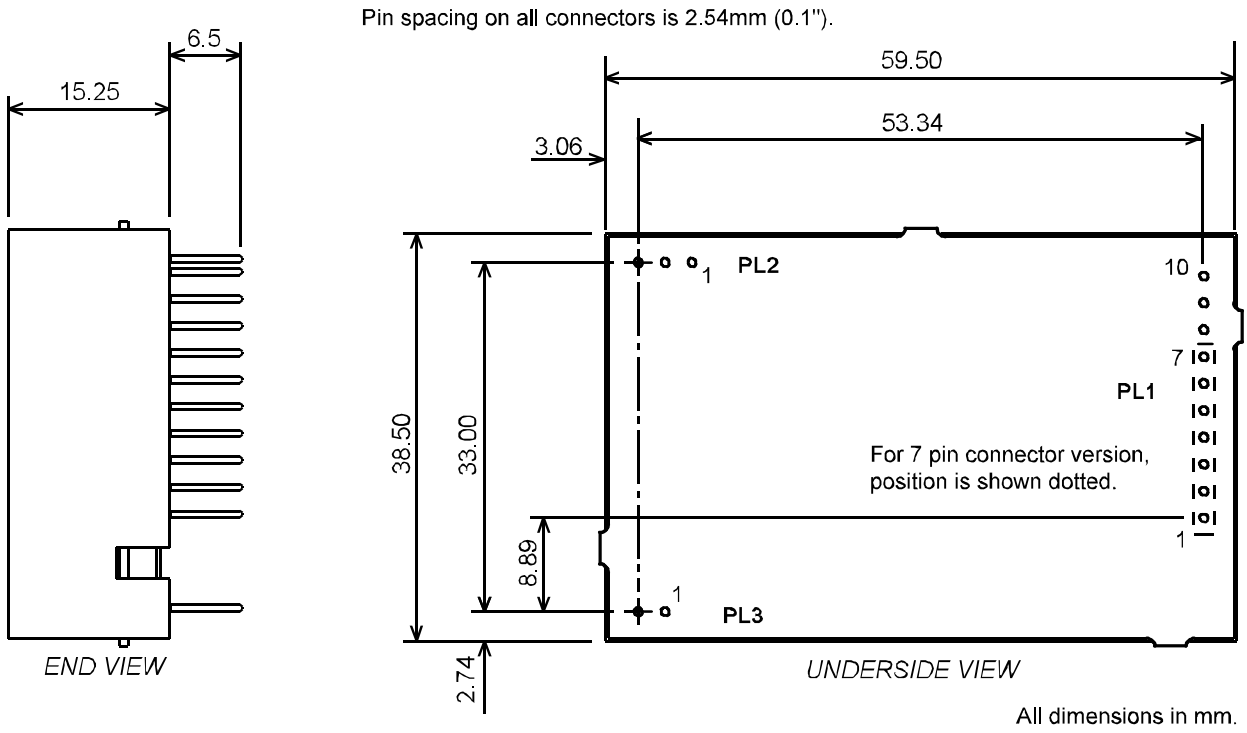

Figure 1 Physical Outline Drawing

SUB-BAND INFORMATION

This transmitter is approved for use within the 868 - 870MHz band. This band is split into various sub-bands, each of which has limitations on transmitted power and duty cycle.

The following table shows these bands, the restrictions of use, and the labelling requirements. The information is taken from the Radiocommunications Authority Document RA114 and CEPT/ERC Recommendation 70-03.

The restrictions of use and labelling requirements for use in other European requirements need to be checked with the relevant authorities of each country.

General Telemetry and Telecommand			
Sub-band (MHz)	**Max. Power erp (mW)**	**Duty cycle**	**Label Requirement**
868.0 - 868.6	25	<1%	R0523 SRD 1f
868.7 - 869.2	25	<0.1%	R0523 SRD 1g
869.3 - 869.4	10	<10%	R0523 SRD 1h
869.4 - 869.65	500	[<10%]	R0523 SRD 1i
869.7 - 870	5	Up to 100%	R0523 SRD 1k
Alarms			
868.6125, 868.6375, 868.6625, 868.6875	10	<0.1%	R0523 SRD 7a
869.2125, 869.2375	10	<0.1%	R0523 SRD 7b
869.2625, 869.2875	10	<0.1%	R0523 SRD 7c
869.6625, 869.2875	25	<10%	R0523 SRD 7d
NOTE: The channel spacing for the ST800 is 25kHz. The centre of the first channel is at a distance of *12.5kHz* from the lower frequency band edge.			

The maximum transmitted power is that measured at the antenna as Effective Radiated Power (ERP). This means that no antenna with any gain can be used with the ST800.

A suitable antenna for use with the unit can be obtained from R. W. Badland Ltd It is a ¼ wave flexible antenna operating over the band 868.0 - 870.0MHz. The part number is BNCUHFF 868.0 - 870.0MHz.

CONNECTION

Connection to the ST800 transmitter is via PL1, PL2 and PL3 which plug directly into the user's own equipment. The location of these connectors is shown in Figure 1 and detailed in the following tables. (The unit is fitted with a 10 pin connector when parallel frequency select facility is provided).

PL1 PIN	NAME	FUNCTION	REMARKS
1	0V	0 volts	common ground
2	$\overline{TXE}$	transmit enable	o/c = transmitter disabled LOW <+0.5V = transmitter enabled 1k nom. internal pull-up to +Vin
3	DIGITAL I/P	data input	0/+3V to 0/+12V, DC-coupled
4	ANALOGUE I/P	data input	> 50 mV p-p, AC-coupled
5	$+5V_{OUT}$	+ 5 volt supply output	50mA maximum current drain
6	RS232 I/P	serial programming i/p	RS232 programming input **Note:** Inverted TTL level data can also be used. If not used, leave not connected, or connect to ground.
7	0V	0 volts	common ground
8	RB1	parallel frequency select	internal pull-up to +5V, active low
9	RB2		
10	RB3		

Connector PL1 pin detail

PIN	NAME	FUNCTION	REMARKS
1	0V	0 volts	common ground
2	RF O/P	RF output	50 ohms output
3	0V	0 volts	common ground

Connector PL2 pin detail

PIN	NAME	FUNCTION	REMARKS
1	+VIN	positive supply	+6.0V to +15.0V
2	0V	0 volts	common ground

Connector PL3 pin detail

FREQUENCY PROGRAMMING

The ST800 has an internal memory which can store up to 128 RF channels (16 randomly programmed and 112 sequentially programmed). The frequency and set-up information is programmed into the unit by a synchronous PCM interface protocol.

The software supplied with the ST800 transmitter is the ST800PRG.exe program. The software can be run on a PC with the serial port connected to PL1 of the ST800 transmitter via a suitable adaptor as shown in Figure 2. If the read-back function is desired, then PL1 pin 10 of the transmitter must be connected to pin 2 of the PC serial port via a buffer circuit. A 1k pull-up resistor to +5V must also be provided as shown.

RUNNING THE SOFTWARE

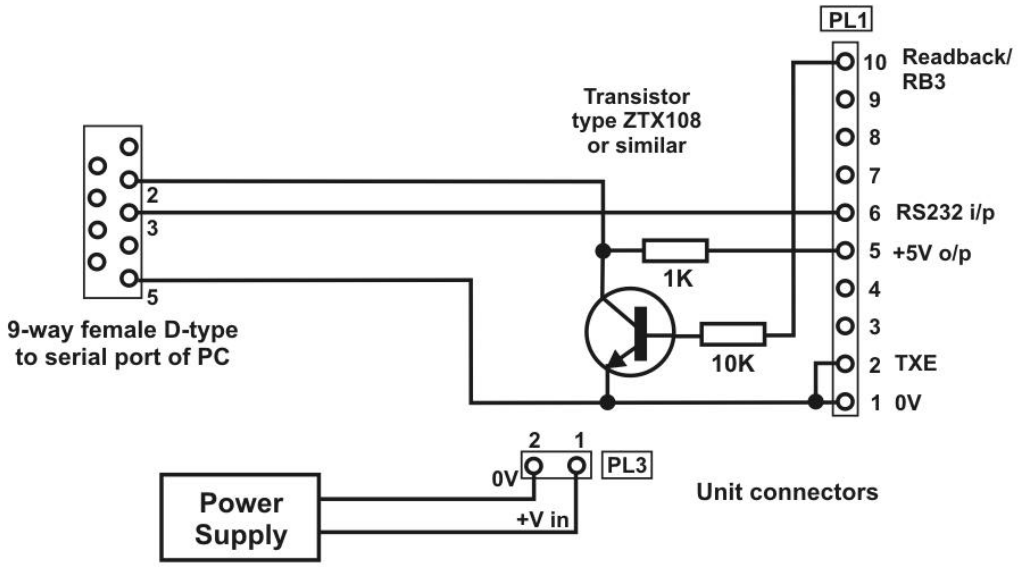

Figure 2 Programming Adaptor

1. Connect ST800 to a suitable supply and to the PC using the programming adaptor.

2. Insert the ST800PRG disk into drive A and type:

   A:STSRN00PRG <return>

3. The user is then prompted to enter the serial port number of his PC which is used to communicate with the ST500 receiver. Enter 1 or 2.

After the software has successfully loaded the main menu screen is displayed as shown in Figure 3. The screen shows the default settings which are entered at factory set-up. These default settings will be displayed whenever the software is run.

Please note that mouse operation is not supported with this program.

```
 ST800  Programmer
                                   Synth. step freq.    12.5 KHz
Chan  0    458.5       MHZ <<
Chan  1    458.5125  MHz          Ref. (TCXO) freq. 12.8  MHz
Chan  2    458.525    MHz
Chan  3    458.5375  MHz
Chan  4    458.55      MHz        Serial channel selected: 0
Chan  5    458.5625  MHz
Chan  6    458.575    MHz        COMMANDS:
Chan  7    458.5875  MHz
Chan  8    458.6       MHz            F2    :copy Ch 16-31 to Ch 0-15
Chan  9    458.6125  MHz            F5    :read from unit
Chan  10   458.625   MHz            F6    :program unit
Chan  11   458.6375 MHz            F8    :Select channel
Chan  12   458.65     MHz
Chan  13   458.6625 MHz            F9    :set synth. step freq.
Chan  14   458.675   MHz            F10   :set TCXO freq.
Chan  15   458.6875 MHz            F11   :set Intermediate freq.
                                   F12   :QUIT
Start table   458.7      MHZ
Max. Freq.  458.95     MHz        Sequential frequencies, Chan. 16 to 127
Table step  1   x 12.5  KHz
```

Figure 3

NOTES:

1. The synthesizer step frequency, the reference (TXCO) frequency and the intermediate frequency are non-programmable.

2. Functions F9, F10 and F11 are not enabled.

3. Function F5 is only enabled when a read-back programming adaptor is used, (refer to Figure 2). This function displays the current frequency table of the connected ST800 transmitter.

4. A value for each parameters has to be entered.

5. Only channel 0 to 15 frequencies can be displayed by this software

Parallel channel selection

Three inputs RB1, RB3 and RB3 applied via PL3 to pin 8, pin 9 and pin 10 respectively, select the operating channel as shown in the following table:

CHANNEL SELECTION			
PIN 10	**PIN 9**	**PIN 8**	**CHANNEL**
LOW	LOW	LOW	7
LOW	LOW	HIGH	6
LOW	HIGH	LOW	5
LOW	HIGH	HIGH	4
HIGH	LOW	LOW	3
HIGH	LOW	HIGH	2
HIGH	HIGH	LOW	1
HIGH	HIGH	HIGH	0

The logic levels are: LOW = < 0.8V,
HIGH = > 2V or floating

RANGE INFORMATION

The following table gives an indication of the typical ranges to be expected between a transmitter and receiver that have simple end-fed dipole antennas.

The following assumptions have been made in the calculations:

line-of-sight between antennas
0dB gain for the transmitter and receiver antennas
0dB loss for connectors and cables between the antenna and the radio connector
20dB fade and environmental margin
-100dBm received signal strength, allowing for digital and analogue signals

Range versus TX power			
Frequency (MHz)	**Power (mW)**	**Power (dBm)**	**Range (km)**
869	5mW	7	0.50
869	10mW	10	0.90
869	25mW	14	1.40

TECHNICAL SPECIFICATION

Frequency range	:	868 - 870 MHz
Switching bandwidth	:	2 MHz
Frequency stability	:	+/-2.5ppm
Number of RF channels	:	up to 128 (16 randomly programable, 112 sequential), serial select/reprogram, 1200 baud RS232 or 1 of 8 parallel select
RF output power into 50 ohm	:	25 mW adjustable to 5mW
Adjacent channel power	:	<200nW (-37dBm)
TX switching time	:	<60ms
Modulation input		
analogue	:	200mV to 5V p-p AC coupled
digital	:	+3 to 12V square wave DC coupled
Frequency response	:	9Hz to 3kHz at -3dB
Deviation	:	±3kHz nom (±5kHz max)
Channel switching delay	:	<50ms across switching bandwidth
Channel spacing	:	25kHz
Modulation type	:	F1D, F3D
Spurious emissions (conducted & radiated)	:	in accordance with ETS/CEPT specifications
Supply voltage	:	6 - 15V DC -ve earth
Supply current at 7.2V	:	<85mA for 25mW output
Interface connections	:	2 and 10 pin 0.1" header
RF connection	:	3 pin 0.1" header
Operating temperature	:	-20°C to +55°C
Storage temperature	:	-30°C to +70°C
Size overall	:	60 x 39 x 15 mm (2.36 x 1.53 x 0.59 inches)
Weight	:	30g
Type approval	:	Approved to EN 300 220
General facilities	:	+5V output
	:	analogue and digital inputs

Wood & Douglas Ltd, Lattice House
Baughurst, Tadley, Hants, RG26 5LP
Tel:+44 (0)118 981 1444 Fax: +44 (0)118 981 1567
email: sales@woodanddouglas.co.uk
website: www.woodanddouglas.co.uk